SHOCKWAFE PRO 7.1

VIP STARTER GUIDE

MUST DO: ONE CLICK PLUG AND PLAY TOOL TO CONFIGURE YOUR ENTIRE SYSTEM

Watch the Unboxing and 1st Time Setup Tutorial Video

List of Movies and Netflix Shows with the Best Surround Sound

Best Way to Enjoy Dolby Atmos Audio

GETTING BEST AUDIO

STEP 1

BEST CONNECTION

HDMI 2.0 High Speed (Recommended) for full audio quality

STEP 2

BEST SETUP

Use our **Perfect Device Matching Tool** to create a custom guide based on your TV or devices.

STEP 3

BEST SURROUND

Using the Shockwafe Remote, press the following:

DIRECT: to enable Dolby Surround effects for effects for Dolby / PCM Content.

STEREO: to enable ALL CHANNEL STEREO for Stereo playback on surround speakers

STEREO DIRECT

S D

STEP 01

BEST CONNECTION

Use HDMI to enjoy best multi-channel surround audio

BEST: HDMI Connection

We recommend to use HIGH SPEED 4K HDMI 2.0 cable for best audio and video quality. Learn More >

STEP 02

BEST SETUP

Click **DEVICE GROUP** to see step by step connection instructions

MUST DO
ONE CLICK PLUG AND PLAY TOOL TO CONFIGURE YOUR ENTIRE SYSTEM

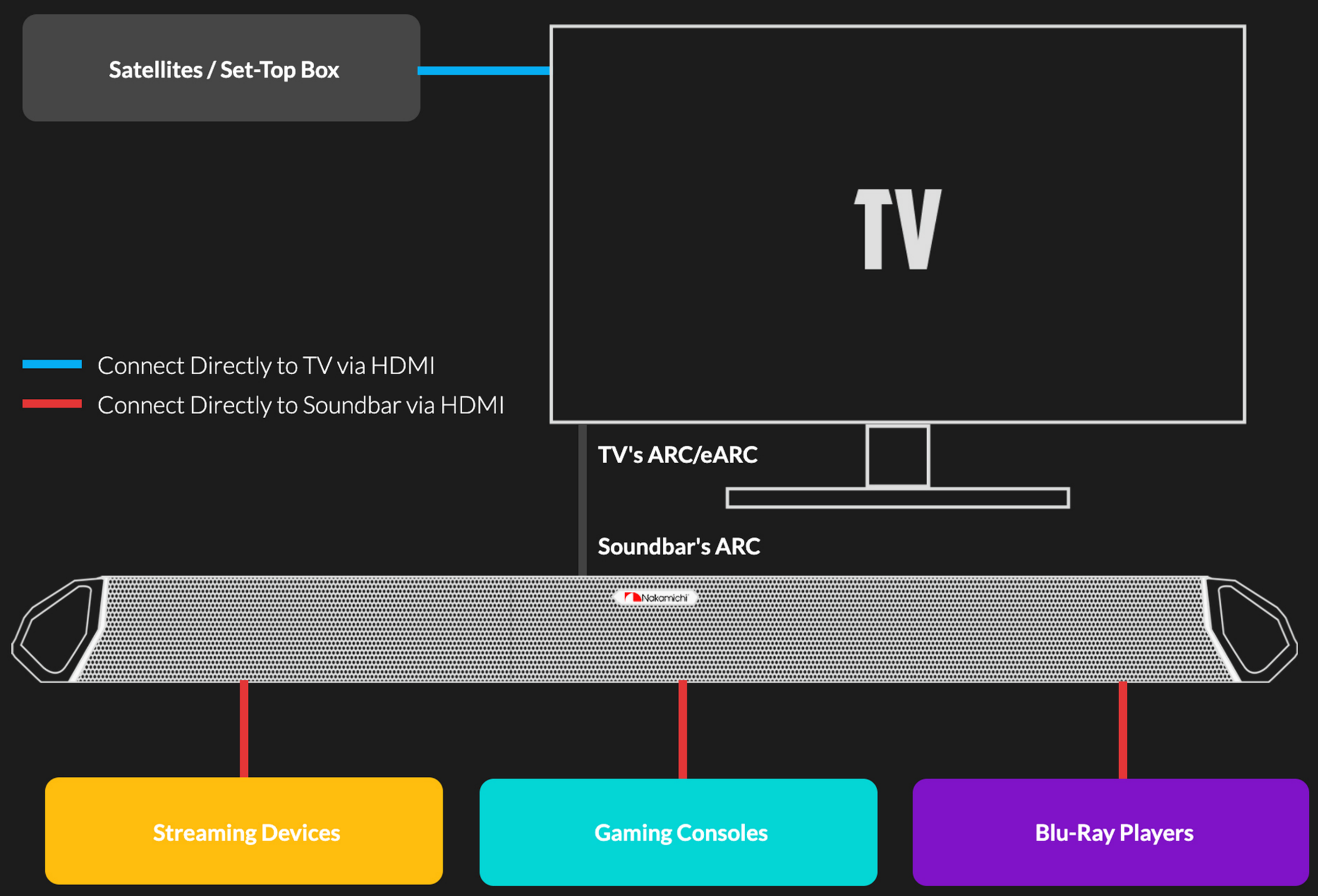

STEP 03

BEST SURROUND

Use the **DIRECT** or **STEREO** button to toggle between the various surround modes for your desired experience.

Expanded Remote Guide >

1. All Channel Stereo / Stereo

All Channel Stereo = Enables Stereo playback on surround speakers. Best for music, YouTube™ by boosting volume level of surround speakers.

Stereo Only = Enables playback with Soundbar + Subwoofers only. (No audio from surround speakers)

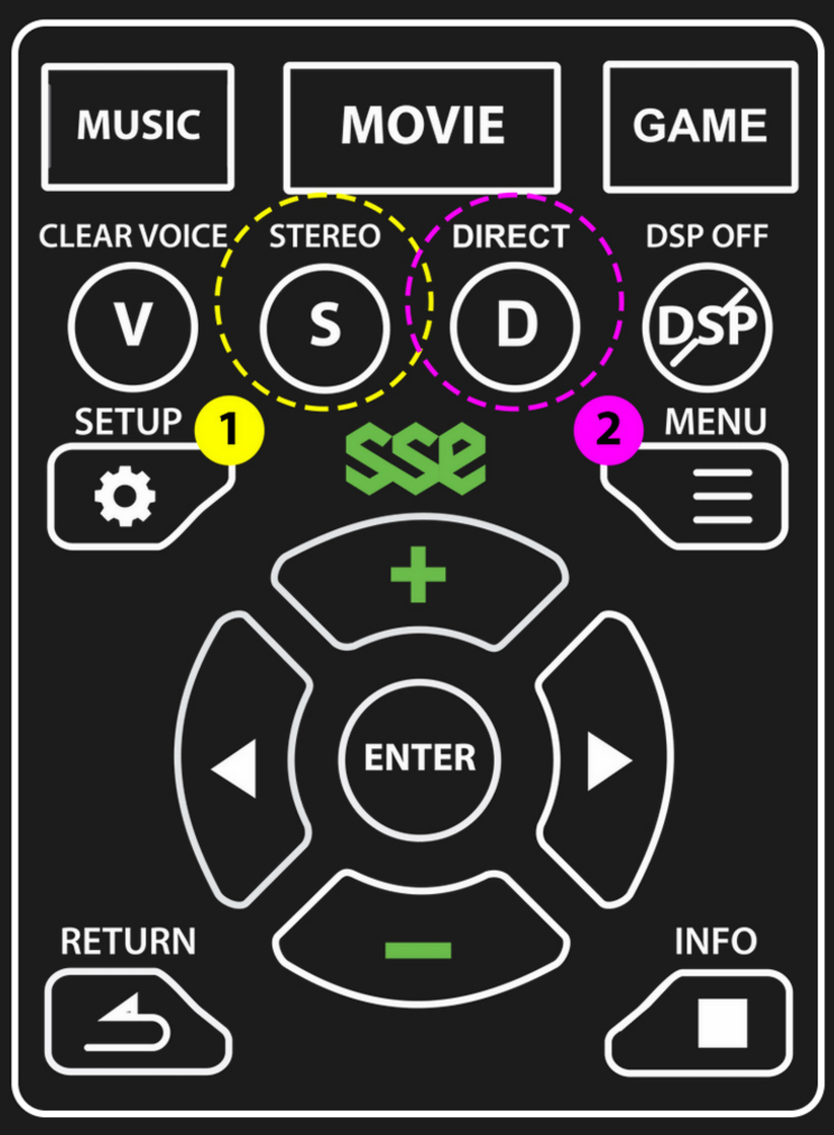

2. For Dolby / PCM Audio

DOLBY SURR = Dolby All-Channel Surround + Height (video Content Default)
DOLBY UPMIX = Dolby All-Channel Surround Upmix
NATIVE = Playback based on original surround format encoded for source material

For DTS encoded content only. Cannot enable when Dolby or PCM content is playing:
NEURAL X = DTS All-Channel Surround Upmix

ONE BUTTON ROOM OPTIMIZATION

Optimize your suround based on preconfigured volume settings for the following room sizes:

- **Small (14 x 14ft)**
- **Medium (18 x 18ft)**
- **Large (22 x 22ft)**

Remote Guide >

SPEAKER PLACEMENT

Subwoofer: Move them closer to the TV/front of the room for enchanced performance.

See Speaker Stands >

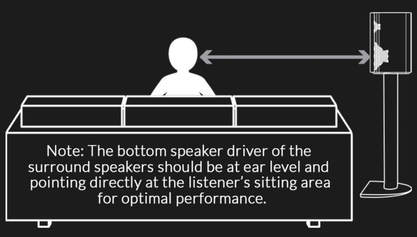

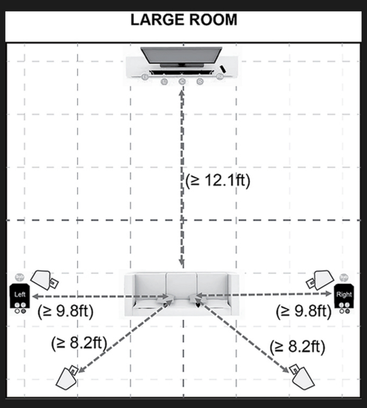

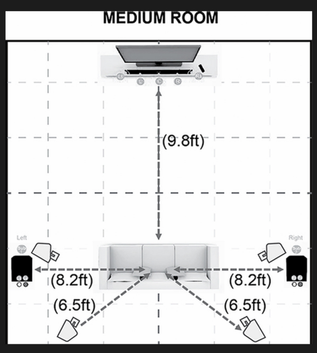

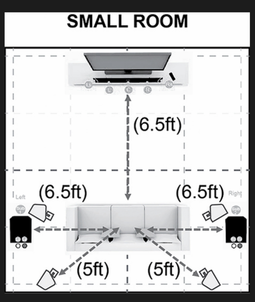

ADVANCED FEATURES

WHAT IS HDMI CEC

HOW TO SETUP HDMI CEC

FREQUENTLY ASKED QUESTIONS

Product Registration

User Manual

Perform Soundbar Reset

How would you like to contact us?

Speak to our ninjas

(415) 805 6913

Weekdays 10am - 7pm PST
Saturday, Holidays 10am - 5pm PST

Write to us

support@nakamichi-usa.com

Weekdays 10am - 7pm PST
Saturday, Holidays 10am - 5pm PST

Community

Owners' Forum

Join Nakamichi Shockwafe Universe